EXPLODED VIEW

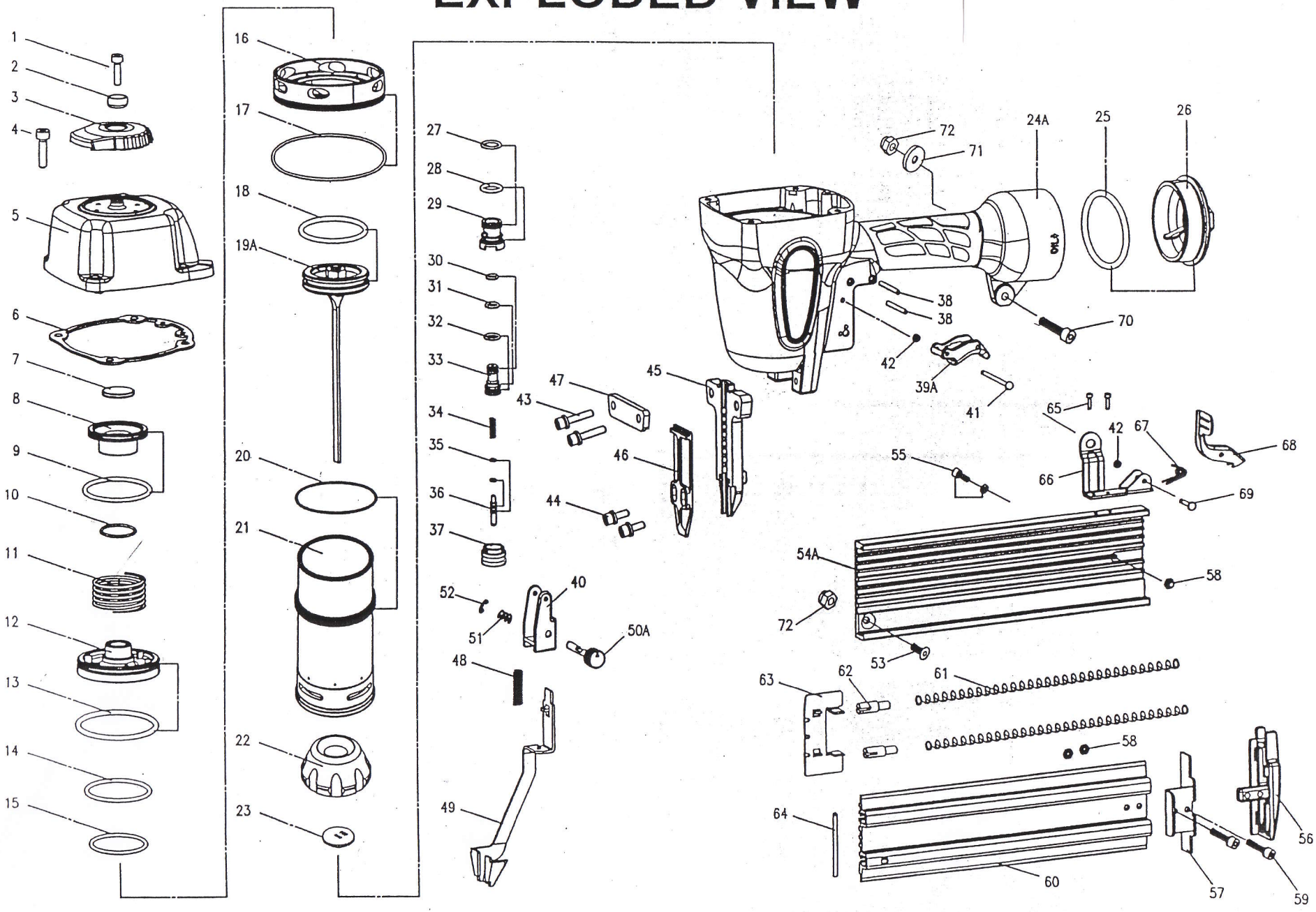

Parts List

Item No.	Part No.	Description	Q'ty
1	30106080166	Hex. Soc. Hd. Bolt	1
2	20790000001	Washer	1
3	20790010115	Deflector	1
4	30106250266	Hex. Soc. Hd. Bolt	4
5	209400201XX	Cap	1
6	20940130000	Gasket	1
7	20940190015	Seal	1
8	20940140016	Piston Stopper	1
9	30700040000	O-Ring	1
10	30700008000	O-Ring	1
11	20940160000	Spring	1
12	20940150016	Piston, Head Valve	1
13	30700102000	O-Ring	1
14	30700075000	O-Ring	1
15	30700117000	O-Ring	1
16	20940340016	Retaining Ring	1
17	30700104000	O-Ring	1
18	30700019000	O-Ring	1
19A	20940462101	Driver Assembly	1set
20	30700103000	O-Ring	1
21	20940350000	Cylinder	1
22	20940470015	Bumper	1
23	20940480001	Driver Guide	1
24A	209406020XX	Body Assembly	1set
25	30700118000	O-Ring	1
26	209407X00XX	End Cap	1
27	30700079000	O-Ring	1
28	30700081000	O-Ring	1
29	20770900016	Valve	1
30	30700002000	O-Ring	1
31	30700003000	O-Ring	1
32	30700071000	O-Ring	1
33	20770910016	Valve Plunger	1
34	20770960001	Spring	1
35	30700080000	O-Ring	2
36	20770920000	Plunger	1
37	20770930016	Plunger Cap	1
38	30803240001	Spring Pin	2
39A	207508820XX	Trigger Assembly	1set
40	20942840115	Contact Trip Guide	1

Item No.	Part No.	Description	Q'ty
41	20770890001	Trigger Pin	1
42	30700078000	Grommet	2
43	30106350266	Hex. Soc. Hd. Bolt	2
44	30104080166	Hex. Soc. Hd. Bolt	2
45	20941350066	Nose	1
46	20941340066	Door	1
47	20941330066	Driver Guide Cover	1
48	21031490001	Spring,Safety	1
49	20941480066	Upper Safety Lever	1
50A	20940992015	Adjusting Button Assy.	1set
51	20941010001	Adjusting Spring	1
52	31304000001	E-Ring	1
53	30505120166	Hex. Soc. Hd. Bolt	1
54A	20942052008	Magazine Assembly	1set
55	31604080166	Hex. Soc. Hd. Bolt	1
56	20942430015	Tail Cover	1
57	20942180001	Magazine Cap	1
58	30604070066	Locknut	2
59	30104180266	Hex. Soc. Hd. Bolt	2
60	20942200008	Magazine Cover	1
61	20032210001	Pusher Spring	2
62	20942240016	Spring Lock	2
63	20942130001	Pusher	1
64	30803450001	Spring Pin	1
65	30104080266	Hex. Soc. Hd. Bolt	2
66	20942170066	Bracket	1
67	20942290001	Torsion Spring	1
68	20942280066	Latch	1
69	20942250001	Pin	1
70	30105200166	Hex. Soc. Hd. Bolt	1
71	30900005001	Flat Washer	1
72	30605080066	Locknut	1

T2264#40944060005

01/20/2005