CARAT	MICROCOUP 260 CHASSIS	ART. NO.: BUJ2000600
		DATE: 01/05/2011

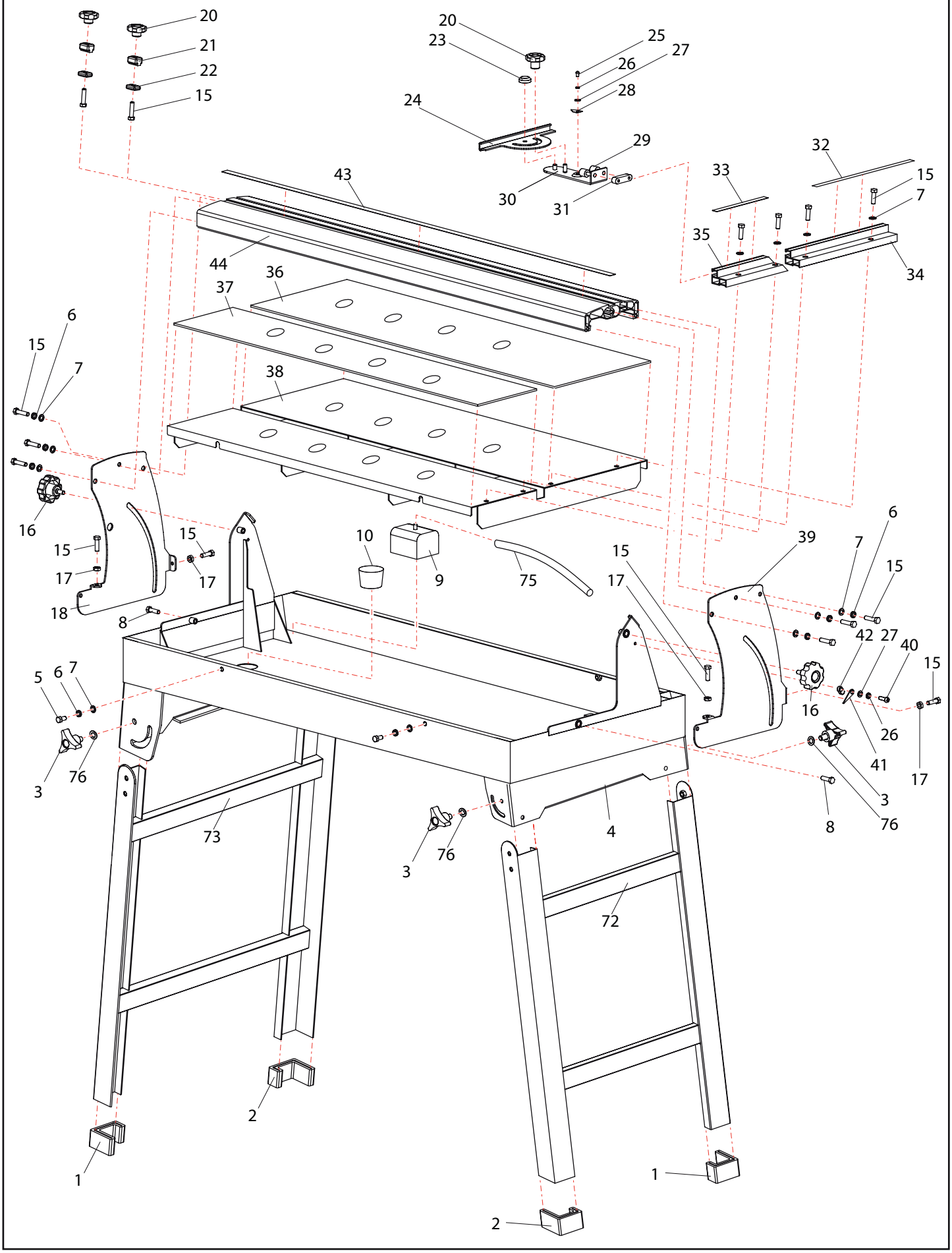
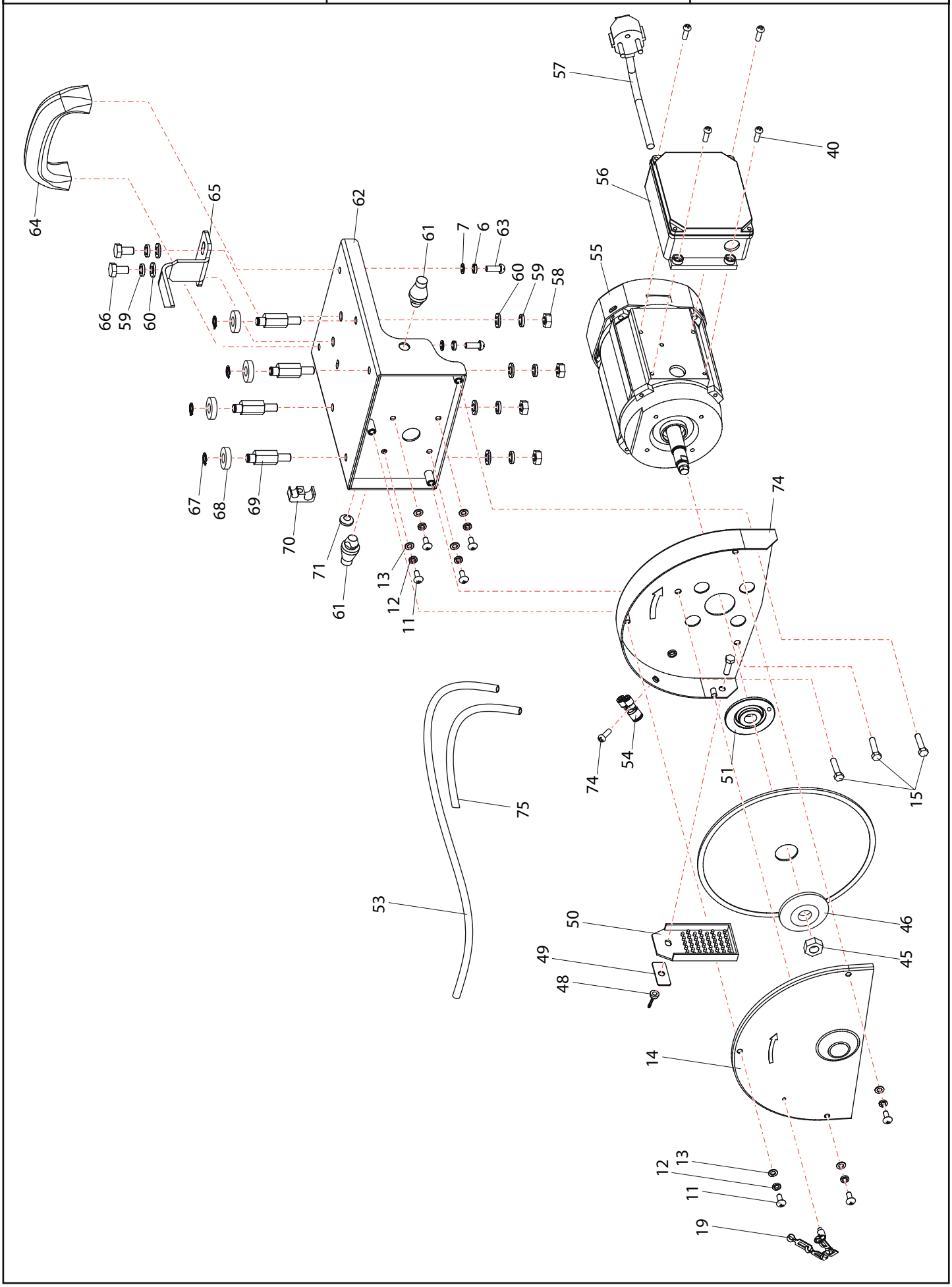
CARAT	MICROCOUP 260 SAW HEAD	ART. NO.:	BUJ2000600
		DATE:	01/05/2011